general specifications

DESCRIPTION

Designed to be wall mounted at low level, Lo-Line models are designed for heating only and are suited to a wide range of domestic and light commercial applications.

PRODUCT RANGE

MODEL	ISOLATING VALVES	FILTER	CONTROLS COVER	THERMOSTAT
LO-LINE 6-4	▬	▬	▬	▬
LO-LINE 9-6	▬	▬	▬	▬
LO-LINE 14-10	▬	▬	▬	▬
LO-LINE 19-15	▬	▬	▬	▬

▬ Supplied as standard

COLOUR REFERENCE (MAIN CASING)

Cream (RAL 1013) with contrasting ABS end caps.
White (RAL 9003) with contrasting ABS end caps.

WATER CONNECTIONS AND CONTROLS

Water connections (15mm compression) are on the left-hand side and the system pipework may be brought in from underneath or the rear.

Electrical controls and connections are on the right-hand side and can be protected by a tamper proof controls cover.

FAN ONLY OPERATION

All models offer a fan only option which allows a flow of air to be circulated when the heating element is not in operation.

FILTER

A washable filter is fitted, removable without tools.

THERMOSTAT

Lo-Line models have a facility for connecting to an external room thermostat.

LO-LINE DIMENSIONS

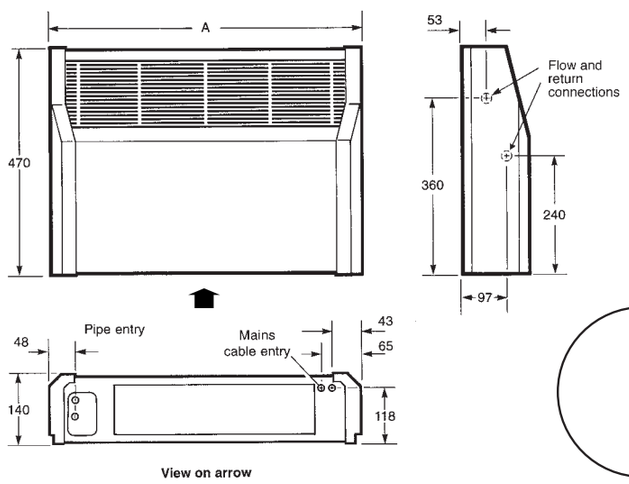

MODEL	A mm
6-4	513
9-6	635
14-10	903
19-15	1165

POSITION OF FIXINGS AND CLEARANCES

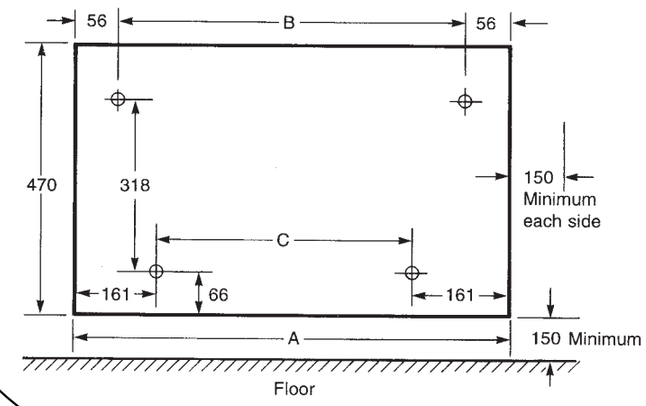

MODEL	A mm	B mm	C mm
6-4	513	401	191
9-6	635	523	313
14-10	903	791	581
19-15	1165	1053	843

PERFORMANCE DATA

HEATING

It is preferable to select the model with an output capable of maintaining the calculated heat losses of the room when operating at normal speed. This will enable the boost fan speed and the higher temperature differences to be used to greater advantage for rapid warming of the room from cold in excessive conditions.

When establishing the temperature difference, i.e. mean water to room temperature, allowance should be made for temperature drop in the system. It is the temperature at the convector which dictates the output.

HEATING PERFORMANCE DATA

MODEL	POWER CONSUMPTION watts	WATER CAPACITY litres	FAN SPEED	HEAT OUTPUT watts TEMPERATURE DIFFERENCE °C						HEAT OUTPUT Btu/h TEMPERATURE DIFFERENCE °F					
				40°	45°	50°	55°	60°	65°	72°	81°	90°	99°	108°	117°
6-4	25	0.24	NORMAL	741	829	916	1003	1090	1176	2528	2829	3127	3424	3720	4015
			MEDIUM	843	943	1043	1142	1240	1339	2877	3218	3558	3896	4233	4568
			BOOST	1162	1300	1437	1574	1710	1845	3965	4436	4905	5371	5836	6297
9-6	40	0.32	NORMAL	1098	1228	1357	1486	1617	1743	3748	4191	4633	5073	5519	5948
			MEDIUM	1437	1608	1777	1945	2114	2282	4904	5486	6066	6642	7216	7788
			BOOST	1811	2026	2240	2453	2665	2875	6182	6916	7645	8372	9096	9816
14-10	60	0.49	NORMAL	1922	2150	2377	2603	2828	3052	6559	7338	8113	8884	9652	10416
			MEDIUM	2367	2648	2928	3206	3483	3759	8080	9039	9993	10943	11889	12831
			BOOST	2803	3136	3467	3796	4125	4451	9567	10703	11833	12957	14077	15192
19-15	60	0.64	NORMAL	2921	3268	3613	3956	4298	4639	9970	11154	12331	13503	14670	15832
			MEDIUM	3351	3748	4144	4538	4930	5321	11436	12783	14144	15488	16826	18159
			BOOST	3751	4197	4640	5081	5520	5957	12803	14323	15836	17340	18839	20331

Heat outputs tested in accordance with BS 4856 Part 1.
FLOW RATE: 340 ltr/h (75 gal/h)

FLOW RATE CORRECTION FACTORS:
455 ltr/h (100 gal/h) multiply output by 1.06
227 ltr/h (50 gal/h) multiply output by 0.96
113 ltr/h (25 gal/h) multiply output by 0.85

APPROXIMATE HYDRAULIC RESISTANCE

ltr/h	mm wg				ft wg				gal/h
	6-4	9-6	14-10	19-15	6-4	9-6	14-10	19-15	
455	939	1100	1222	1362	3.08	3.61	4.01	4.47	100
340	640	701	749	914	2.10	2.30	2.40	3.00	75
227	274	338	400	450	0.90	1.10	1.30	1.40	50
113	107	110	117	183	0.35	0.37	0.38	0.53	25

SOUND PRESSURE AND WEIGHTS

MODEL	SOUND PRESSURE AT 2.5m dBA			UNIT WEIGHT kg
	NORMAL	MEDIUM	BOOST	
6-4	17.5	26.0	38.7	7.5
9-6	22.2	31.8	44.8	9.5
14-10	24.9	32.5	41.6	13.5
19-15	23.2	32.7	39.5	16.0

AIR FLOW

MODEL	AIR FLOW m^3/h			AIR FLOW ft^3/h		
	NORMAL	MEDIUM	BOOST	NORMAL	MEDIUM	BOOST
6-4	65	86	122	2295	3036	4307
9-6	112	129	175	3954	4554	6178
14-10	160	200	288	5648	7060	10166
19-15	241	288	335	8507	10166	11826

Sound pressure tests in accordance with EN 23741.

ELECTRICAL DATA

All Lo-Line models require an electrical supply of 220-240V~50Hz fused at 3A.